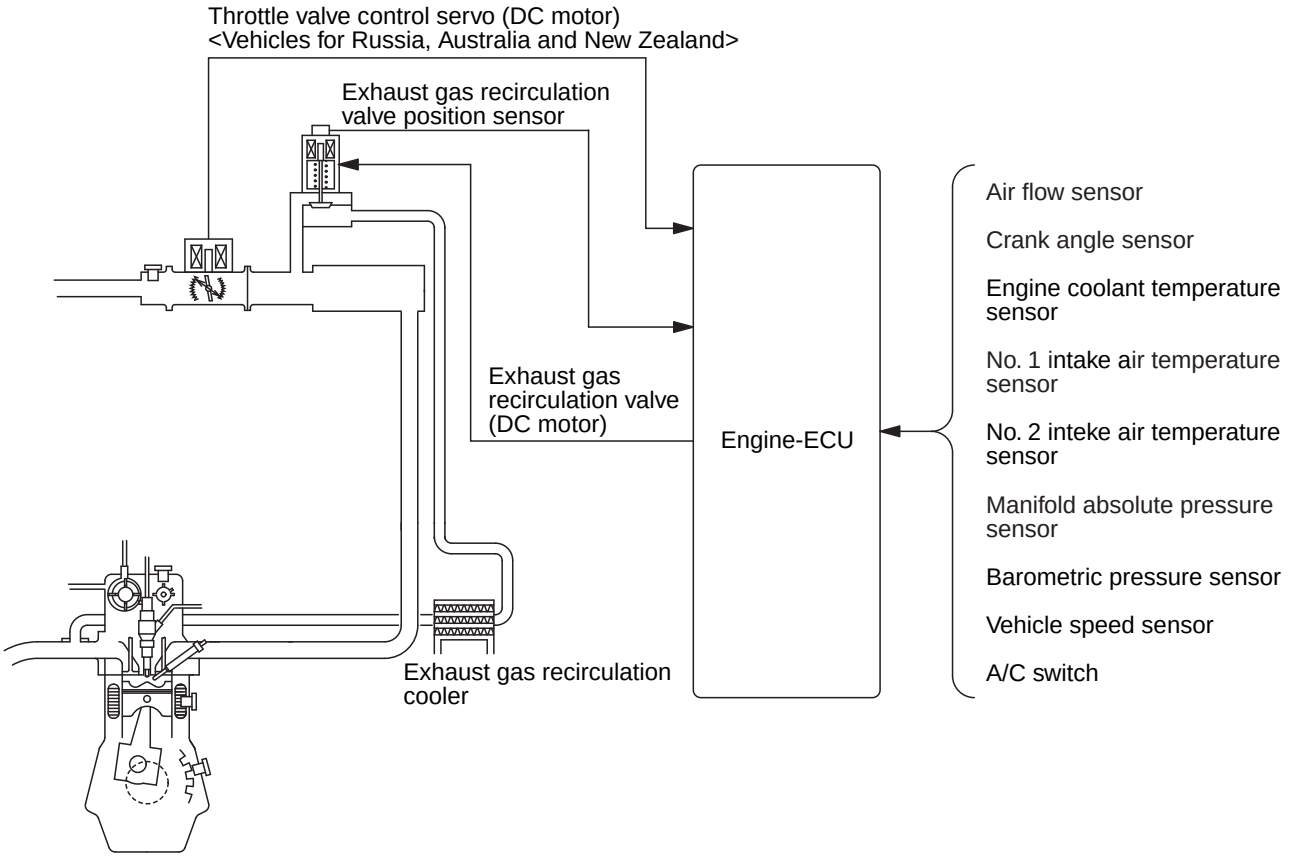
Throttle valve control servo (DC motor)
<Vehicles for Russia, Australia and New Zealand>
Exhaust gas recirculation valve position sensor
Exhaust gas recirculation valve (DC motor)
Engine-ECU
Air flow sensor
Crank angle sensor
Engine coolant temperature sensor
No. 1 intake air temperature sensor
No. 2 inteke air temperature sensor
Manifold absolute pressure sensor
Barometric pressure sensor
Vehicle speed sensor
A/C switch
Exhaust gas recirculation cooler

AK802304AE